SONOTEC

Ultrasonic Flow Sensor

SONOFLOW® IL.52 V2.0

User Documentation

Including

Technical Data Sheet

Operating Manual

Certificates

(This page has been deliberately left empty)

The inline compact sensor **SONOFLOW® IL.52/3 V2.0** serves to detect smallest flow rates of liquids quickly.
Constructed as a built-in component for machines and apparatuses, the sensor could be easily mechanically installed and electrically integrated into the control system. Due to the current, frequency and switching outputs industrial dosing applications can be supported. The RS485 interface (SONOTEC® protocol; MODBUS® via software settings) allows bus operation of up to 12 sensors in rough industrial environments.
Specifically designed for the use in areas with rigorous hygiene requirements, the sensor is suitable for circulation cleaning and steam sterilization.

General data

SONOFLOW® IL.52/3 V2.0 **Ultrasonic Flow Sensor for Liquids**		
Order-No.	IL.52/3 PEEK / Viton®*	200 08 0001
	IL.52/3 PEEK / FFKM	200 08 0044
Dimensions (L x W x H)	148 x 59 x 46 mm	
Weight	370 g	
Media	Water or other acoustically transparent, low-viscosity liquids (for applications with high-viscosity liquids, e.g. fats / special paints, screening tests must be made)	
Upper range value	3 000 ml/min	
Accuracy for water (at 23° C ± 2 K and 1 bar)	0 … 30 ml/min: ± 0.3 ml/min	
	30 ... 3 000 ml/min: ± 1.0 %	
Calibration	Factory calibrated for water at 23 °C ±2 K, outlet of the tubes depressurized (0 bar), other calibration on request	
Zero stability	0.375 ml/min	
Pressure drop at nominal flow rate	0.95 bar	

* Viton® is a registered trademark of DuPont de Nemours, Inc.

Measuring method	Ultrasound, time of flight measurement
Measuring cycle	Typical 20 ms (minimum 4 ms)
Indirect temperature measurement	Integrated sensor at the inlet (accuracy of temperature sensor ±1 °C, with $T_{ambient}$ 23 °C and Q 1 l/min)
Mounting	Fixed installation: 4 x recessed threaded holes M5, depth: 10 mm
Measuring channel	Ø 3.0 mm
Adaptor for tube connection	Outer diameter 8 mm, inner diameter 4 mm
Pressure rating	PN10
Material (in contact with fluid)	Measuring channel and measuring cell: PEEK, Seals: Viton® / FFKM
Operating voltage	12 … 30 VDC, ripple max. 10 %, protection against reverse polarity (external fuse, if required: min. 200 mA)
Current consumption	Maximum 50 mA (with open current, frequency and switching output, depending on supply voltage)
Electrical connection	8-pin M12 connector, DIN EN 61076-2-101:2013
Shielding	Required: via cable / housing (mounting screws)
Interfaces	• Current output for flow rate: 0/4 … 20 mA • Frequency output for flow rate: 0 … 20 kHz, 5 V digital • RS485 interface: bus-capable (SONOTEC® protocol, optional MODBUS®) • Switching output: configurable as PNP / NPN / Push-Pull, 0 … 30 V • Digital input (MODBus on request)
Current output for flow rate	⚠ **NOTE:** Load to GND. The max. load depends on the operating voltage: 12 V → 250 Ω, 15 V → 500 Ω, 24 V → 1 kΩ, 30 V → 1.2 kΩ

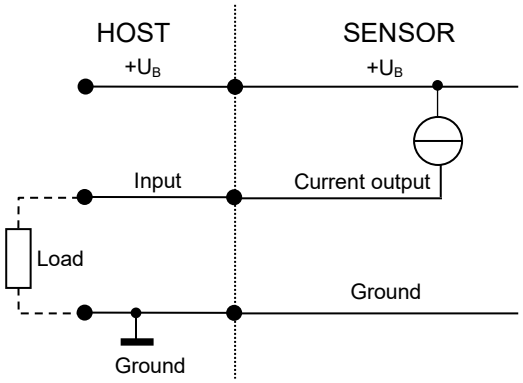

Frequency output for flow rate	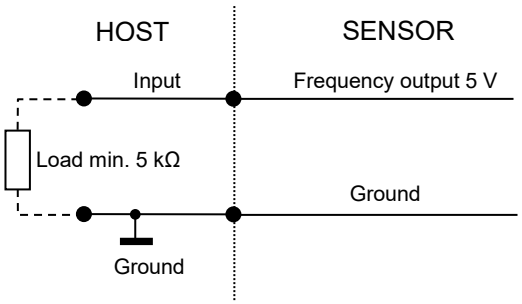
RS485 interface	SONOTEC® protocol: Half-duplex operation / 115.200 baud / no parity / 1 stop bit / no handshaking (MODBUS® via software settings) ⚠ **NOTE:** Please find the description of the serial protocol for details (upon request). Recommended electrical connection of the RS 485 interface ⚠ **CAUTION!** If the interface is not used, it does not necessarily has to be connected; the two pins A and B can remain open. 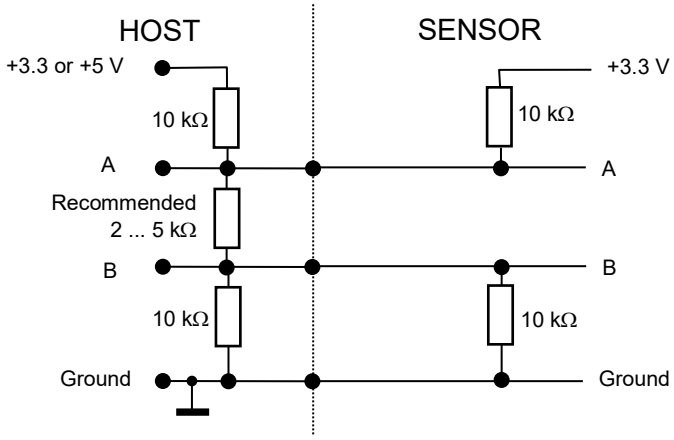
RS485 Bus operation	The sensor supports bus operation with max. 12 subscribers. The default address is #01. ⚠ **NOTE:** The address can be changed by software settings (see opt. accessories). Permitted are addresses from #01 … #12. → Menu: Identification | RS485 address
Switching output	Freely configurable: e.g. adapting batch process or threshold switch of flow, maximum 100 mA

Digital input	Freely configurable: for example for zero point calibration of flow or start dosing processes Voltage resistant up to 30 V
	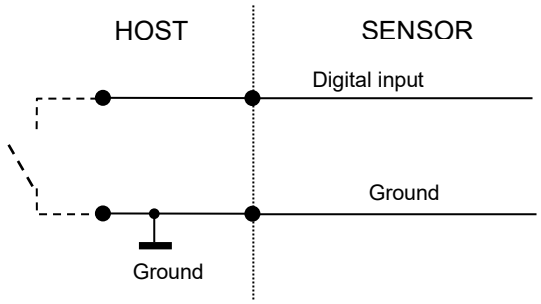
Protection class	IP65
Cleaning and sterilization	Maximum liquid temperature: temporarily +145 °C; Resistant to cleaning agents (e.g. caustic soda or 3 percent nitric acid) ⚠ **NOTE:** Verify that the sensor materials (PEEK, Viton® / FFKM) are resistant against the cleaning agent.
Media temperature	0 ... +100 °C (T > 70 °C without voltage, temporarily +145 °C)
Ambient temperature	0 ... +70 °C
Storage temperature	-20 ... +70 °C
Directives and standards	• EMC directive 2014/30/EU • RoHS: 2011/65/EU, exception: III 7cl/ IV 15 • Acoustic emission: IEC 61157
Maintenance	Maintenance-free
Scope of delivery	• SONOFLOW® IL.52/3 V2.0 according to specification • User documentation
Optional accessories	• 8-pole M12 sensor cable, length 2 m / 5 m • Calibration protocol
	SONOFLOW® C³ Software for testing parameter settings, to adjust sensors for a specific application and for recording measurements consisting of • USB Data Converter, type 013 for the connection to a computer • USB cable, type A-B, length 2 m • 8-pole M12 connecting cable, length 2 m • Switching power supply (12 VDC) • USB flash drive with SONOFLOW® C³ Software and driver for Windows

Electrical connection

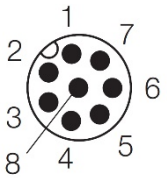

Male connector
(at the sensor)

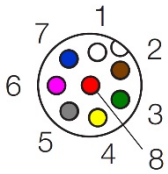

Female connector
(at the cable)

M12 connecting cable	Pin	Color	Connection
Assignment	1	White	Ground
	2	Brown	Operating voltage +12 ... 30 VDC
	3	Green	Current output (0/4 … 20 mA)
	4	Yellow	RS485 B
	5	Grey	RS485 A
	6	Pink	Frequency output 0 … 20 kHz
	7	Blue	Switching output: PNP / NPN / Push-Pull
	8	Red	Digital input

Technical drawings

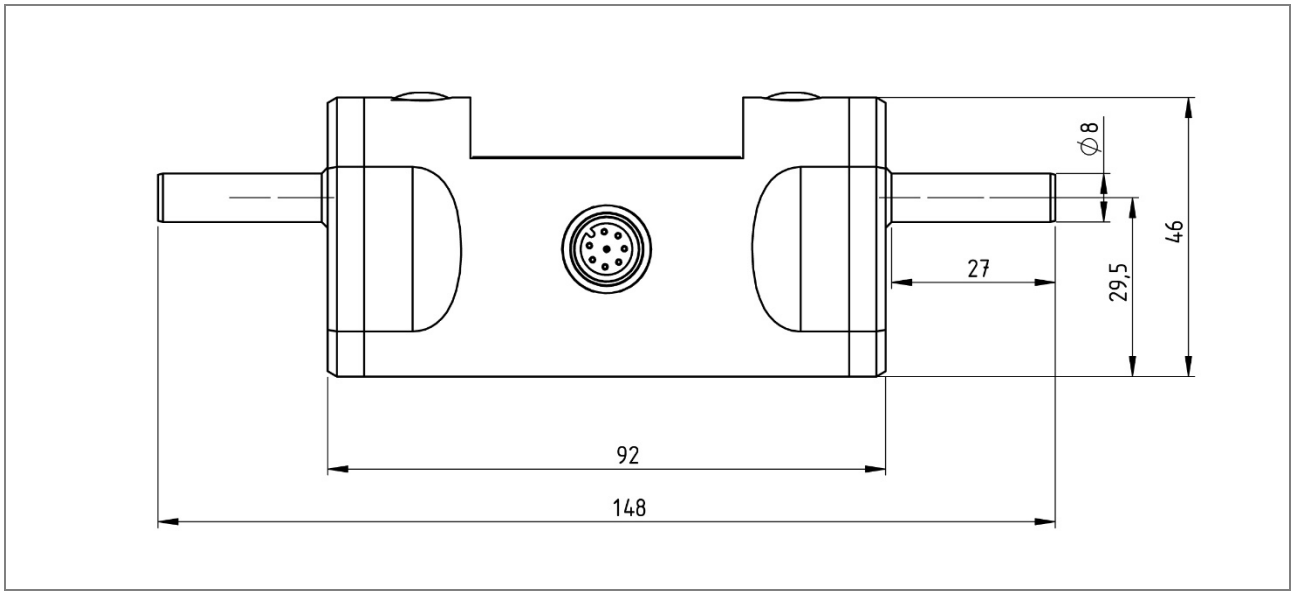

Figure 1: Dimensions SONOFLOW® IL.52/3 V2.0 – Side view

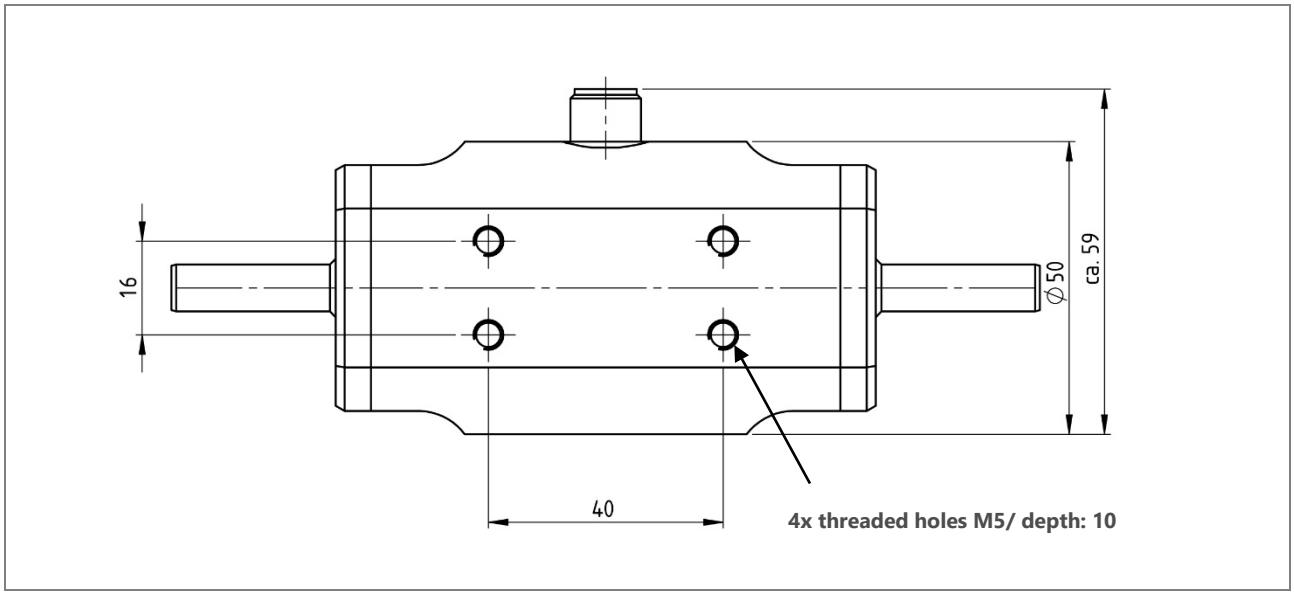

Figure 2: Rear side with drill holes for mounting

Drawings are not to scale. Dimensions in mm, unless otherwise specified. Information is subject to change without notice.

HEADQUARTERS GERMANY

SONOTEC GmbH
Nauendorfer Str. 2
06112 Halle (Saale)
Germany

Tel.: +49 (0)345 / 133 17- 0
sales_eu@sonotec.de
www.sonotec.eu

AMERICAS

SONOTEC US Inc.
190 Blydenburgh Rd
Suite 8, 2nd Floor
Islandia, New York 11749, USA

Phone: +1 631 / 415 4758
sales@sonotecusa.com
www.sonotecusa.com

SONOTEC

Ultrasonic Flow Sensor

Type SONOFLOW IL.52 V2.0

Operating Manual

Revision: 1.0; Date: 2018-10-26
Information is subject to change without notice!

Contents

(This page has been deliberately left empty)

1 Notes on operating manual

1.1 General

Thank you for choosing a sensor from the SONOFLOW IL.52 V2.0 series.

This manual forms part of the sensor and should therefore be stored in its immediate vicinity where it can be accessed by all operators at any time. It contains all the information needed to ensure proper and efficient use, along with all the instructions to ensure safe operation of the SONOFLOW IL.52 V2.0.

1.2 Symbols used

Hazards or special information is indicated in the following ways:

⚠ DANGER	Warns of **imminent threat of danger** with very high risk. If not avoided, it will result in death or serious injury.
⚠ WARNING	Warns of **possibly imminent danger** with moderate risk. If not avoided, it could result in death or serious injury.
⚠ CAUTION	Warns of **danger** with low risk. If not avoided, it may result in minor or moderate injury.
ATTENTION	Warns of danger. If not avoided, it may result in material damage.

NOTE!
This paragraph provides information or draws attention to special features.

(This page has been deliberately left empty)

2 Safety regulations

2.1 User qualifications

WARNING

The SONOFLOW IL.52 V2.0 may only be installed and operated by users who have read and understood the entire operating manual and the Technical Data Sheet.

Make sure to read all safety regulations.

NEVER CHANGE SETTINGS of the sensor before you have saved all parameters with the help of SONOFLOW Monitor.

Ignoring the safety instructions or changing parameters can cause malfunction of the sensor. Depending on the application this can have unforeseeable consequences and lead to serious injury with lasting health consequences for personnel and damage or demolition of device components.

2.2 General safety information

The SONOFLOW IL.52 V2.0 is a state of the art product that complies with all applicable safety regulations. All sensors are factory tested and delivered in a safe condition for operation.

The following safety instructions apply:

⚠ WARNING

Incorrect installation and use of the SONOFLOW IL.52 V2.0 sensor and its components can present a hazard for the user.

- Installation may only be performed by qualified personnel. The applicable planning and installation regulations must be followed. The plant operator is responsible for the legal compliance of the installation and documentation.
- All listed conditions in the Technical Data Sheet – especially regarding temperatures and voltage range – must be met unconditionally. Values are not allowed to exceed or to fall below the specified limits, not even temporarily.
- The sensor may only be exposed to a minimal risk of mechanical damage. In case of higher risks, the sensor must be protected against mechanical influences.
- If there is visible damage, the sensor must be taken out of operation immediately.
- The Sensor may not be immersed.
- The use of cleaning agents depends on the sensor version (seals and their resistance). Make sure, that the seals made of FFKM or Viton are not damaged. Follow the instructions in chapter 6.2.
- The sensor must never be opened. This impairs the product safety. The sensor does not contain any user-serviceable parts. Repairs must be carried out by the manufacturer.
- Settings and parameters of the sensor can be changed with the SONOFLOW Monitor. Make sure to read the corresponding document. Never change settings before you have saved the default settings.

3 Sensor description

3.1 Intended use

The ultrasonic flow sensor SONOFLOW IL.52 V2.0 serves for the precise measurement of smallest flow rates and flow velocities of liquids.

Any use other than the designated use is prohibited and can result in personal injury or damage to property. SONOTEC Ultraschallsensorik Halle GmbH accepts no liability for damage, including to third parties, caused by improper handling of the sensors.

3.2 Construction

The SONOFLOW IL.52 V2.0 consists of two ultrasonic transducers, appropriate control electronics and evaluation electronics. For the measurement of the media temperature a temperature sensor is integrated.

Via the output (configurable current, pulse, frequency or switching output) the signals are transmitted to the customer control unit.

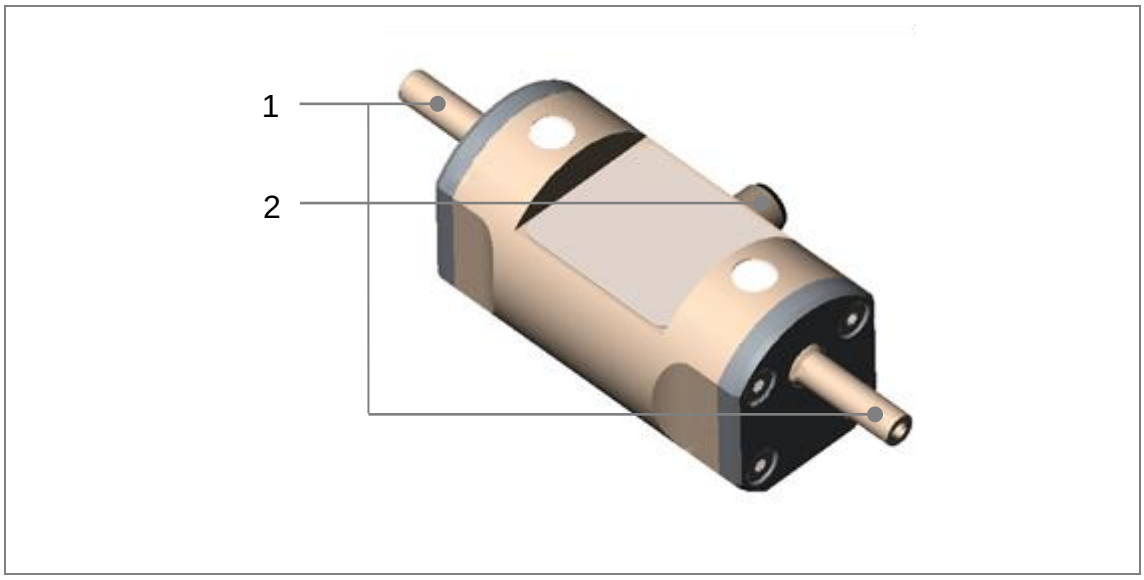

Figure 1: Construction of the SONOFLOW IL.52 V2.0

Mode	Function
1	Adaptor for tube connection
2	M12 connector for operating voltage and outputs 1 and 2

Table 1: Interfaces of the SONOFLOW IL.52 V2.0

With respect to material resistance the following sensor versions are available:

Seals (in contact with the medium)	Order number
Viton	200 08 0001
FFKM	200 08 0044

Table 2: Versions of SONOFLOW IL.52 V2.0

3.3 Measuring method and functioning

The ultrasonic sensor works with the time-of-flight measurement principle. The flow rate is derived from the time difference of the ultrasound with and against the flow direction and the geometry of the measuring cell. Multiple measuring data are collected by adequate evaluation algorithms before processing the data for higher accuracy.

The flow rate can be indicated by a current output of [0/] 4 to 20 mA serving as the process interface.

Additionally the following interfaces are available:

- Frequency output for flow rate: 0 to 20 kHz, 5 V digital
- RS485 interface: bus-capable
- Switching output: configurable as PNP / NPN / Push-Pull, 0 to 30 V
- Digital input (MODBus on request)

Please find the descriptions in the “Technical Data Sheet.”

3.4 Requirements for Liquid

The measuring method using ultrasound is suitable for all sound transparent, low-viscosity liquids.

For industrial applications with high-viscosity liquids such as fats or special paints a higher pressure drop (at nominal flow) has to be expected. In this case the specified value for nominal flow cannot be achieved.

3.5 Parameterization, calibration and readout of measuring values (Accessories)

With the SONOFLOW Monitor software (optional) in conjunction with a computer the sensor can be validated and adjusted to particular measuring tasks. Furthermore using the Monitor, the measured values can be displayed on a screen. The measurement data can be recorded in a table and be saved to a file.

All available accessories are listed in the “Technical Data Sheet”.

4 Installation and commissioning

The SONOFLOW IL.52 V2.0 is intended as component to be integrated into devices or machines. The sensor is mechanically and electrically incorporated into the customer control unit.

4.1 Attaching the Sensor SONOFLOW IL.52 V2.0

The geometric layout always determines flow characteristics in a fluid system. The sensor accuracy depends among other things on the mounting position in the flow system.

⚠ CAUTION

Incorrect installation may have an impact on the measuring accuracy. Depending on the application this can have unforeseeable consequences.

- Mechanical vibrations can affect sensor functions. Ensure that the mounting or the tubes (lines) do not transmit vibrations to the sensor.

Recommended is an installation position with a flow direction against the force of gravity.

⇨ Use the drilled holes on the rear side of the sensor to attach the sensor. (For dimensions: see the Technical Data Sheet).

⇨ Connect the tubing with the sensor via the designated adaptors:

- Outer diameter: 8 mm
- Inner diameter: 4 mm

⇨ Connect the sensor to power supply via the M12 plug-in connector as described in the “Technical Data Sheet”.

NOTE!

A shielding is not necessary but recommended for long lines (> 30 m) or in harsh industrial environments.

If pins at the connector are not used, they should be covered to protect them against moisture and contamination

Use the service interface only in conjunction with the SONOFLOW Monitor (optional accessory).

5 Output Configuration and Settings

The settings can be adapted for special measuring tasks using the SONOFLOW Monitor (optional accessory).

5.1 Current output for flow rate

The default settings for current output are:

Parameter	Default setting	Further options (via SONOFLOW Monitor)
Configuration	Flow	Off | Test current (0 … 22 mA)
Range	4 … 20 mA	0 … 20 mA
Limit	> 20 mA	≤ 20 mA
Flow min.	0 ml/min (4 mA)	0 … 3 000 ml/min
Flow max.	3 000 ml/min (20 mA)	0 … 3 000 ml/min
Measuring Error	2 mA	0 … 22 mA
Device Fault	0 mA	0 … 22 mA

Table 3: Default settings for current output

5.2 Frequency output for flow rate

Parameter	Default setting	Further options (via SONOFLOW Monitor)
Configuration	Flow	Off | Test frequency (0 … 20 kHz)
Flow min.	0.00 ml/min (0 kHz)	0 … 3 000 ml/min
Flow max.	3000 ml/min (20 kHz)	0 … 3 000 ml/min
Max. frequency	20 kHz	1 … 20 kHz
Measuring Error	0 kHz	0 … 20 kHz
Device Fault	0 kHz	0 … 20 kHz

Table 4: Default settings for frequency output

5.3 Switching output

Parameter	Default setting	Further options (via SONOFLOW Monitor)
Type PNP	Activated (Flow switch)	NPN | Push pull
Selection	L / H (low values = L [0 V], high values = H [24 V])	Inverted: H / L (low values = H [24 V], high values = L [0 V])
Measuring error	H	L
Device fault	H	L
Configuration	Flow Switch	Fix L | Fix H | Volume dosing (Threshold Volume in ml) | Pulse volume (Pulse volume in ml)
Threshold Flow On	1500 ml/min	0 … 3 000 ml/min
Threshold Flow Off	1200 ml/min	0 … 3 000 ml/min
Totalized volume	Enable volume calculation	Enable negative volume

Table 5: Default settings for switching output

5.4 RS485 interface

Parameter	Default setting	Further options (via SONOFLOW Monitor)
Protocol	Dialog (sensor response on demand only)	Auto Type 11 (sensor transmits measuring data cyclically; interval adaptable)

Table 6: Default settings for RS485 interface

Further information you will find in the document “Concept of Serial Communication” for SONOTEC Flow Sensors. Contact our Service.

5.5 Digital input

Parameter	Default setting	Further options (via SONOFLOW Monitor)
Configuration	Flow Zero Adjust	OFF | Reset Volume | Restart
Option to Zero adjust	Deactivated	While input is active

Table 7: Default settings for digital input

6 Operating the sensor

⚠ CAUTION

Incorrect use of the sensors SONOFLOW IL.52 V2.0 and their components can have an impact on the sensor functionality. Depending on the application this can have unforeseeable consequences.

- Prevent the lateral plates from contacting electrically conductive parts or components. Interferences or high currents can affect the measurement.
- Avoid extreme changes of ambient temperature (e.g. direct sunlight) as well as extreme changes of medium temperature.

6.1 Preparatory work

⇨ Ensure that there are no gas bubbles in the sensor after connecting, downtimes or applications with low flow rates: use maximum flow for some time or – if the sensor is not fixed – by changing the sensor position (light tapping).

↳ The sensor is ready for use.

↳ Flow and sensor status are send via the configured outputs.

If there is visible damage, take the sensor out of operation immediately.

6.2 Cleaning and Disinfection

ATTENTION

Incorrect cleaning of the sensors SONOFLOW IL.52 V2.0 and its components can present a hazard for the user or damage the seals.

- Use only cleaning agents the seals are resistant to.

Do never clean under the following conditions:

- when the operating voltage is applied or
- with highly oxidizing media like sulphuric acid with high concentration nitric acid or hydrofluoric acid.

Do never remove the lateral plates; otherwise the sensor warranty for pressure stability according to EN 12266-1 becomes null and void.

Specifically designed for use in fields with strict hygienic standards the sensor is suitable for circulation cleaning and steam sterilization. The allowed cleaning agents depend on the seal material. Make sure, that the seals made of FFKM or Viton are not damaged.

After using the sensor it is adequately to clean with a suitable flushing agent, to rinse and – depending on the application – to let dry.

7 Troubleshooting and maintenance

The error handling can be adapted to individual requirements using the SONOFLOW Monitor (optional accessory). The sensor has self-test routines and sets defined output signals if an error is detected. The error output can be customized.

Description	Remedy
Measuring Error	e.g. gas in the sensor: Try to remove the gas by maximum flow, by changing the sensor position or by light tapping on the sensor!
Device Fault	Contact SONOTEC!

Table 8: Default values for error output

The sensors of SONOFLOW IL.52 V2.0 series are maintenance free.

8 Disposal

Electrical and electronic equipment can pose serious health and environmental risks if it is not properly disposed of. For this reason it must not be disposed of in domestic waste according to WEEE directive 2012/19/EU (Waste Electrical and Electronic Equipment Directive) but separately at designated collection points or has to be sent back to the manufacturer.

The following symbol on the device refers to the legal obligation in Germany to arrange a separate disposal for electronic equipment. It has to be handled according to specific processes (e.g. concerning the batteries or circuit boards) to ensure a safe, environmentally-friendly recycling or the separate disposal of different device components.

The taking back of used equipment is regulated differently in the various countries and regions. Consult the local authorities and other competent public authorities to inform yourself about the taking back conditions of commercially used electrical equipment.

The sensor does not contain harmful substances that have to be labelled separately regarding the disposal as mercury (Hg), cadmium (Cd), lead (Pb) or hexavalent chromium (e.g. in galvanized parts or circuit boards).

Subject to technical modifications!

MANUFACTURER

SONOTEC
Ultraschallsensorik Halle GmbH
Nauendorfer Str. 2
06112 Halle (Saale), Germany

Tel.: +49 (0)345/133 17- 0
sonotec@sonotec.de
www.sonotec.de

USA CONTACT DETAILS

SONOTEC US Inc.
190 Blydenburgh Rd
Suite 8, 2nd Floor
Islandia, New York 11749, USA

Tel.: +1 631/415 4758
sales@sonotecusa.com
www.sonotecusa.com

E.C. DECLARATION OF CONFORMITY
STANDARD ROUTE TO COMPLIANCE

SONOTEC Ultraschallsensorik Halle GmbH
Nauendorfer Straße 2
06112 Halle (Saale)
Germany

declares under our sole responsibility, that the product

SONOFLOW Series IL.51/ IL.52/ CO.55

to which this declaration relates is in conformity with the following standards, including the valid changes at time of declaration:

2011/65/EU Restriction of Hazardous Substances (RoHS)

2014/30/EU Electromagnetic Compatibility

in agreement with the following standard:

DIN EN 61326-1:2013
Electrical equipment for measurement, control and laboratory use – EMC requirements; Part 1: General requirements

The device family SONOFLOW Series IL.51/ IL.52/ CO.55 are ultrasonic flow sensors for liquids.

The correspondence of the product mentioned above with the directives and laws of the EC-directives are guaranteed by means of a quality management system.

Halle, 15th of June 2016

Hans-Joachim Münch
Managing Director

(This page has been deliberately left empty)

Manufacturer

HEADQUARTERS GERMANY

SONOTEC GmbH
Nauendorfer Str. 2
06112 Halle (Saale), Germany

Tel.: +49 (0)345 / 133 17- 0
sonotec@sonotec.de
www.sonotec.eu

AMERICAS

SONOTEC US Inc.
190 Blydenburgh Rd
Suite 8, 2nd Floor
Islandia, New York 11749, USA

Tel.: +1 631 / 415 4758
sales@sonotecusa.com
www.sonotecusa.com

Document Compilation Revision: 1.3; Date: 2020-05-18
Information is subject to change without notice.